LIDA 200 Series

Incremental linear encoder with large mounting tolerance

- **For measuring steps to 0.5 µm**
- **Scale tape cut from roll**
- **Scale tape attached via cementable scale-tape carrier (LIDA 2x7) or by cementing to the mounting surface (LIDA 2x9)**
- **Reference marks at regular intervals**

LIDA 279/289

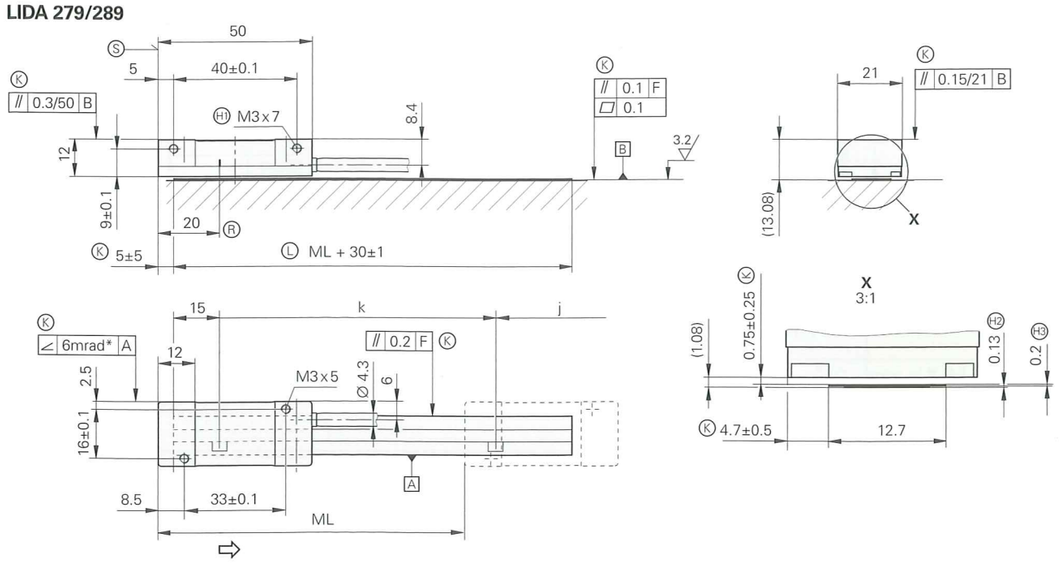

LIDA 277/287

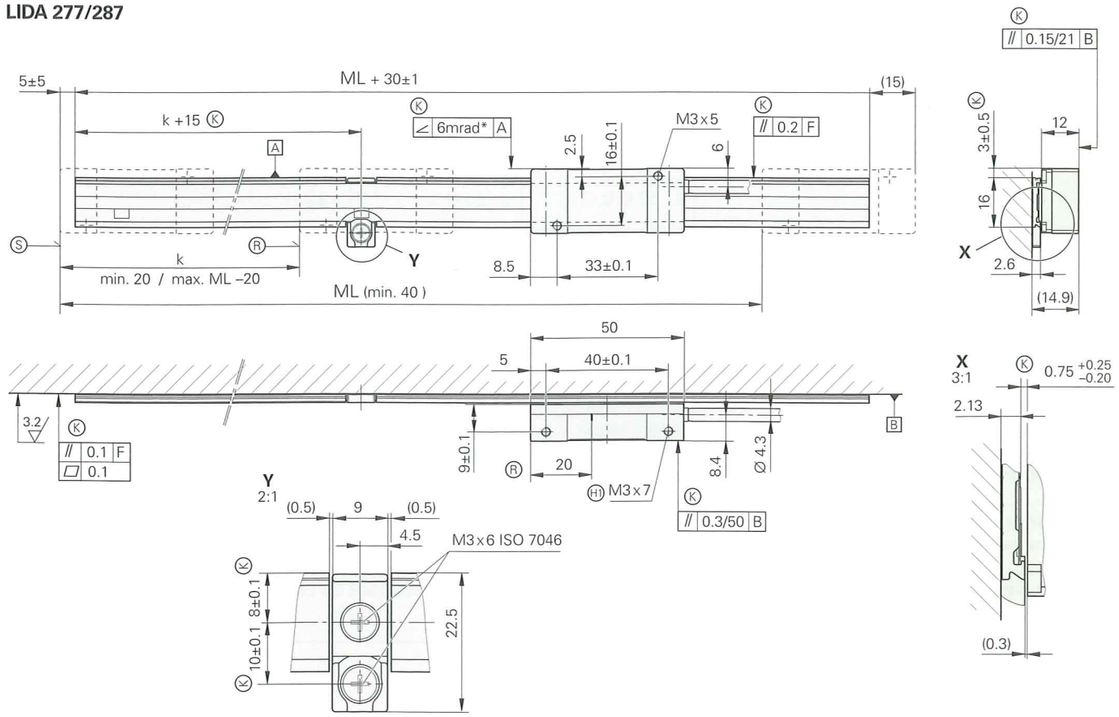

Dimensions in mm

Tolerancing ISO 8015
ISO 2768 - m H
< 6 mm: ±0.2 mm

F = Machine guideway
Ⓚ = Required mating dimensions
Ⓡ = Reference mark
Ⓛ = Scale tape length
Ⓢ = Beginning of measuring length (ML)
H1 = Thread at both ends
H2 = Adhesive tape
H3 = Steel scale tape
⇨ = Direction of scanning head motion for output signals in accordance with interface description

Reference mark:
k = Position of 1st reference mark from the beginning of the measuring length, depending on the cut
j = Additional reference marks every 100 mm

LIDA 279

LIDA 277

Specifications	LIDA 287 LIDA 289	LIDA 277 LIDA 279		
Measuring standard Coefficient of linear expansion	Steel scale tape $\alpha_{therm} \approx 10 \cdot 10^{-6}\ K^{-1}$			
Accuracy grade	± 30 µm			
Scale tape cut from roll*	3 m, 5 m, 10 m			
Reference marks	Selectable every 100 mm			
Incremental signals	∿ 1 V_{PP}	⊓⊔ TTL		
Grating period	200 µm			
Integrated interpolation* Signal period	– 200 µm	10-fold 20 µm	50-fold 4 µm	100-fold 2 µm
Cutoff frequency Scanning frequency Edge separation *a*	≥ 50 kHz – –	– ≤ 50 kHz ≥ 0.465 µs	– ≤ 25 kHz ≥ 0.175 µs	– ≤ 12.5 kHz ≥ 0.175 µs
Traversing speed	≤ 600 m/min		≤ 300 m/min	≤ 150 m/min
Power supply **Current consumption**	5 V ± 5 % < 110 mA	5 V ± 5 % < 140 mA (without load)		
Electrical connection* Cable length	Cable 1 m or 3 m with D-sub connector (15-pin) ≤ 30 m (with HEIDENHAIN cable)			
Vibration 55 to 2000 Hz **Shock** 11 ms	≤ 200 m/s^2 (EN 60068-2-6) ≤ 500 m/s^2 (EN 60068-2-27)			
Operating temperature	0 °C to 50 °C			
Weight Scanning head Scale tape Scale-tape carrier Connector Cable	 20 g (without cable) 20 g/m 70 g/m (only for LIDA 2x7) 32 g 30 g/m			

* Please select when ordering